INTELLIGENT ACCESS
FOR A SAFER TOMORROW

technospacio

FLAP BARRIER GATE

TS-F- 500

DATASHEET

Modern Access Control
for a **Smarter World**

SECURE ACCESS

RELIABLE PERFORMANCE

MODERN DESIGN

ANTI-TAILGATING SECURITY

SMOOTH & SILENT OPERATION

LOW MAINTENANCE

DURABLE STRUCTURE

BI-DIRECTIONAL PASSAGE

ACCESS REDEFINED

PEOPLE | PLACES | POSSIBILITIES

www.technospacio.com

Features

Dimensions

Front view

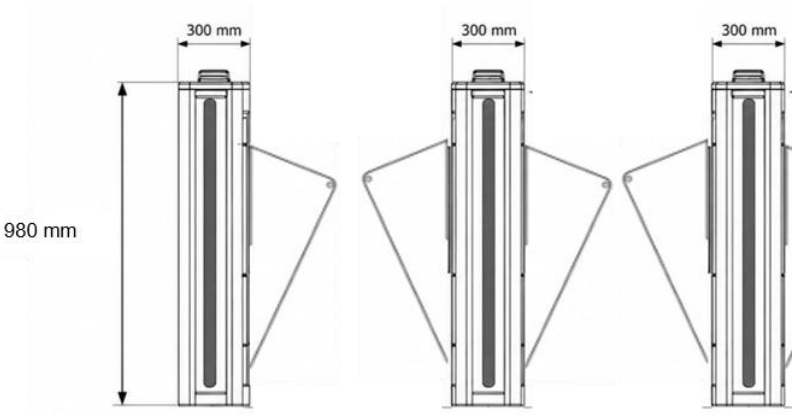

Side view

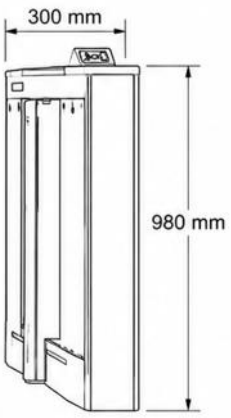

- LED Indicators: High-visibility green and red LED indicators clearly show access status and direction in real time.
- Emergency Exit: Allows free passage during power outages or emergencies and automatically resets when power is restored.
- Working Direction: Supports both single-directional and bi-directional operation.
- Automatic Reset: The swing arms automatically return to the locked position within 5 seconds (adjustable) if access is delayed.
- Anti-Pass back: Prevents unauthorized entry by keeping the gate locked when access is attempted from the reverse direction.
- Fast Unlock: Unlocks within 0.2 seconds (adjustable) after receiving a valid access signal.
- High Performance: Designed for reliable, long-life operation with fast and stable response.
- Alarm Function: Infrared sensors detect unauthorized or reverse-direction access attempts and trigger an alarm.
- Anti-Tailgating: Prevents unauthorized users from following an authorized person through the gate during a valid access cycle.
- Anti-Intrusion: The gate remains locked until a valid access signal is received.

Customization

The cutout for readers can be customized

Provide us with the dimensions of the card reader/scanner or other access control reader and we will customize the cutout according to its dimensions.

System Integration Figure

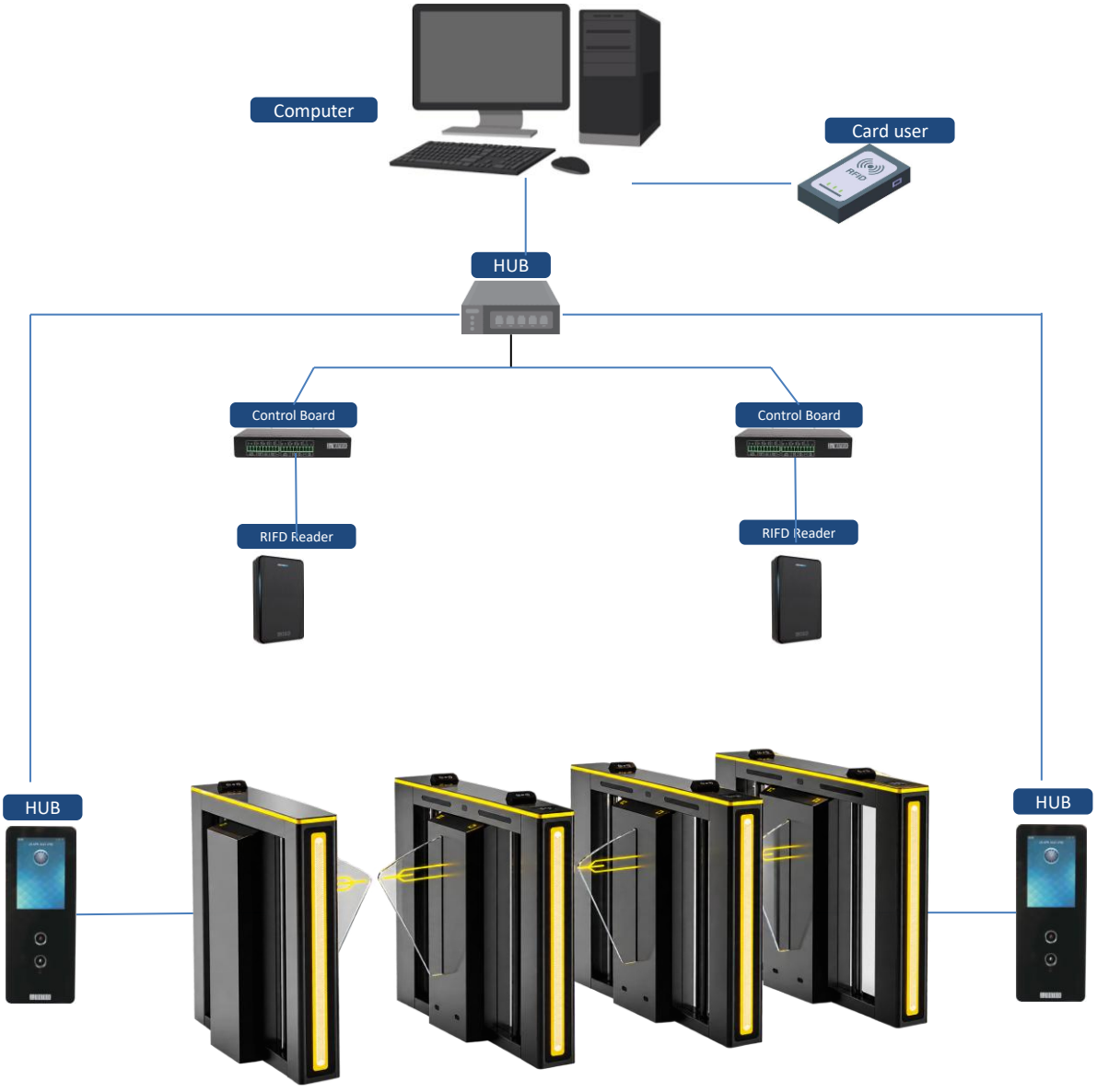

Technical Specifications

Brand	Technospacio
Material	SUS 304 Stainless Steel / 1.5 mm Top 1.2 mm enter body
Dimension	1400*300*980mm (4.59*0.98*3.21ft) (standard)
Passage Width	600mm (1.97ft)
Passage direction	Unidirectional/Bi-directional
Mechanism	DC Brushless Motor/Servo Motor (optional)
Operating time	0.5 seconds
Pass rate	≥50 persons/minute
Arm Material	Acrylic with LED

Power Supply	100V-240V 50/60Hz
Power Rate	60w
Working Environment	Indoor/Out Door (Covered)
IP Sensor	6 pairs
Communication	RS485/RS232
Working Temperature	-40°C ~ 70°C
IP Rating	IP54
MCBF	8 Million Cycles
Relative Humidity	95% Maximum

Lane Combination

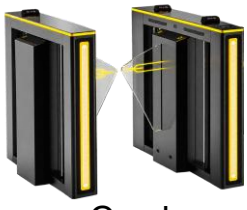

One Lane

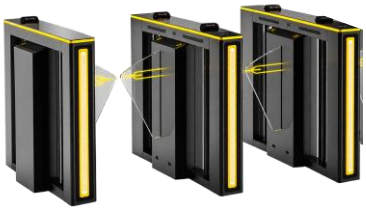

Two Lanes

Three Lanes

Access Control

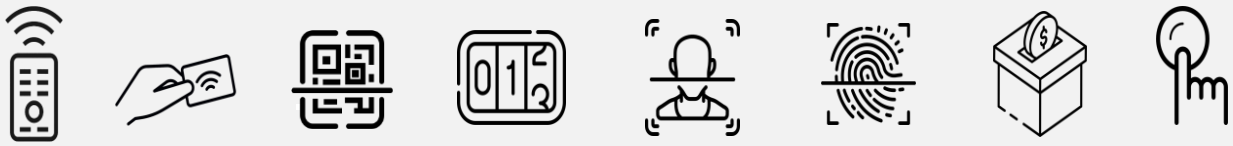

Our turnstile gates come with relay signals and RS485/RS232 interfaces. You can use your own access control system, or we can provide a complete access control system to you.

Contact Us

TECHNOSPACIO TECH SOLUTION PVT LTD. 4, 5th Cross, dayanada layout, Ramamurthy nagar,

Banaswadi, Bengaluru, 560016, INDIA.

Email: Sales@technospacio.com

Site: www.technospacio.com